Cryogenic valves DN8 - DN50

3 Piece ball valves with ISO top flange, series CA-CRYO
Butt weld, threaded, socket weld and flanged version

CA 66 CBS DN25

DN8 - DN25

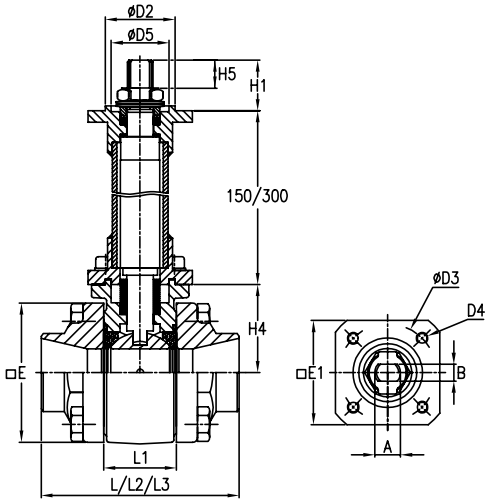

DN32 - DN50

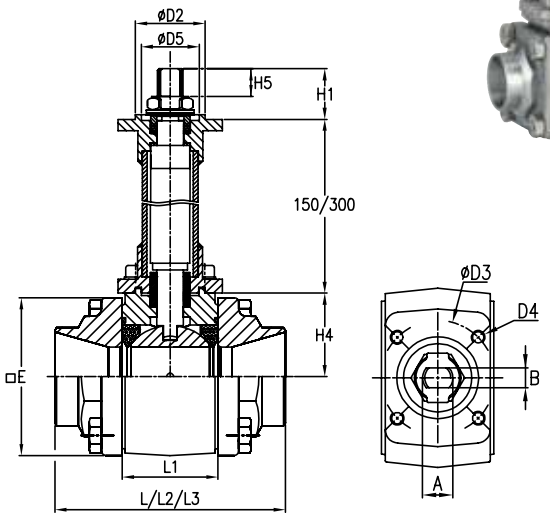

CA 66 CBS DN25

Available end connection options:

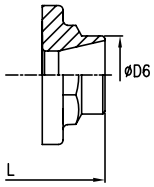

Butt weld: CBS

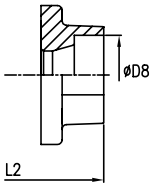

Socket weld: CBSW

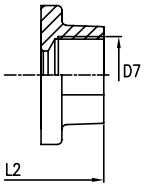

Threaded: CBG

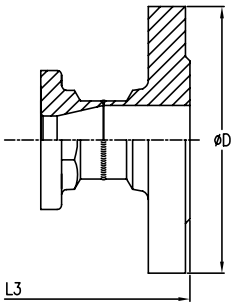

Flanged: CBF
(Cast versions available on request)

Design features

- Reduced and full bore options available
- Stainless steel trim
- Forged end connections
- Integrated ISO 5211 top flange for easy automation
- Wide variety of seat material options available
- Temperature range: -196°C to + 200°C
- Pressure balancing hole in upstream cheek of the ball
- Scalloped seat design
- DN15 - DN65 in compliance with EN 1626
- Spindle extensions to be mounted uniquely vertically
- Pressure rating: maximum PN100 in function of valve size and seat material selection
- Valve design according EN 13445
- Valves are degreased according EN 12300
- Valves are individually packed in polyethylene bags
- Size range: DN8 - DN50: CA version
  DN65 - DN150: RA version

Dimensions in mm

DN	ISO 5211	L	L1	L2	L3 series 1	H1	H4	H5	E	E1	øD	øD2	øD3	D4	øD5	øD6	D7	øD8	A	B	Ball bore
8	F03	65	20.4	65	-	10.5	30	7	45	45	-	25	36	M5	22	13.5	1/4"	14.2	9.5	5.4	11.1
10	F03	65	20.4	65	130	10.5	30	7	45	45	90	25	36	M5	22	17.2	3/8"	17.6	9.5	5.4	11.1
15	F03	65	20.4	65	130	10.5	30	7	45	45	95	25	36	M5	22	21.3	1/2"	21.8	9.5	5.4	11.1
20	F03	72.5	24.5	72.5	150	10.5	32	7	52	45	105	25	36	M5	22	26.9	3/4"	27.4	9.5	5.4	14.2
25	F04	85.4	31.4	85.4	160	22	38	12	60	45	115	30	42	M5	25	33.7	1"	34.2	11.1	7.5	20.6
32	F04	99.3	41.3	99.3	180	22	36	12	68	45	140	30	42	M5	25	42.4	1 1/4"	43	11.1	7.5	25.4
40	F05	110.4	48.4	110.4	200	29	42	16.5	76	52	150	35	50	M6	30	48.3	1 1/2"	49	14.3	8.9	31.7
50	F05	126.3	56.3	126.3	230	29	46	16.5	88	52	165	35	50	M6	30	60.3	2"	61.1	14.3	8.9	38

Cryogenic valves Series DN65 - DN150

3 Piece ball valves with ISO top flange, series RA-CRYO
Butt weld, threaded, socket weld and flanged version

PTFE cryo seats (scalloped)

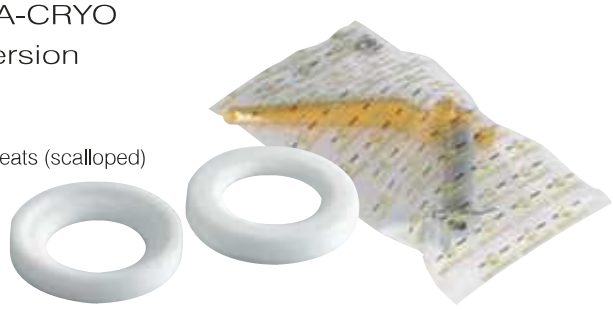

Grease-free wrapping
in polystyrene bags

DN65

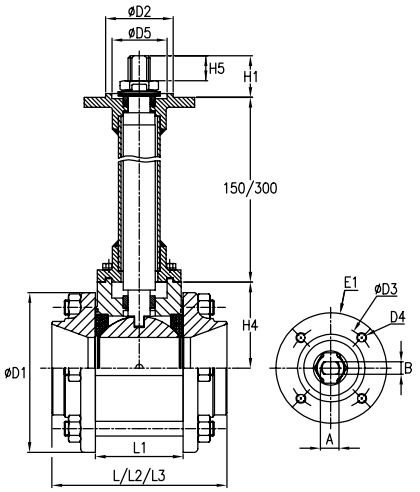

DN80 - DN250

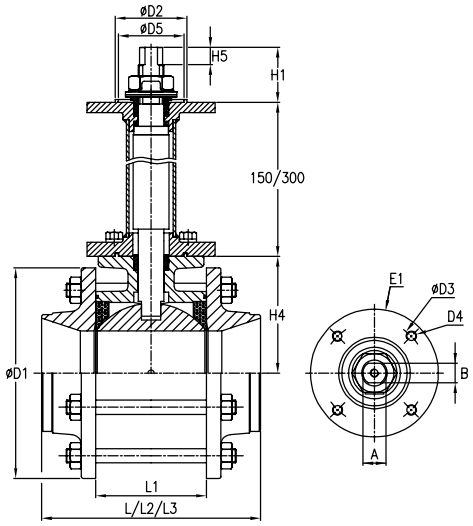

Available end connection options:

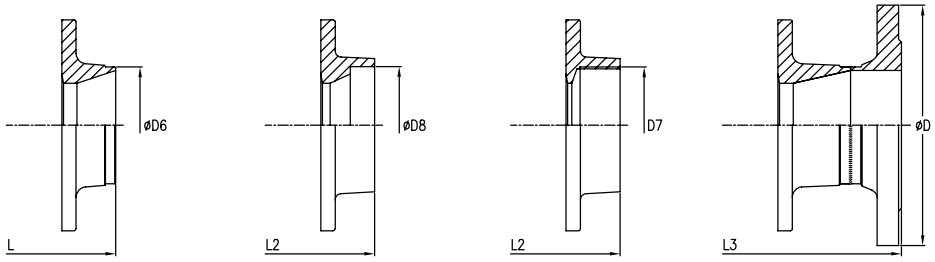

Butt weld: CBS | Socket weld: CBSW | Threaded: CBG | Flanged: CBF

Approvals and certificates

- TA-Luft according VDI 2440
- ATEX: 94/9/CE, group-category II 2 G D
- CE: Module H, category III
- Lloyds register type approval
- DIN-GOST on request
- On request, valves DN65 are in compliance with EN 1626

AFAQ ISO 9001 VERSION 2000

CE
- PED module H, category 3
- TPED module H, category 2
- ATEX: II2G/D EEx c

Dimensions in mm

DN	ISO 5211	L	L1	L2	L3 series 1	H1	H4	H5	E1	øD (PN 16)	øD1	øD2	øD3	D4	øD5	øD6	D7	øD8	A	B	Ball bore
65	F07	142.6	71.4	160	290	35	70	21.5	Ø90	185	143	55	70	M8	45	76.1	2 1/2/"	77	18	12	50
80	F07	169.5	88.9	180	310	54	99	28	□76	200	165	55	70	M8	45	88.9	3"	90	22.5	19	62
100	F10	214	108.5	214	350	54	114	28	Ø125	220	206	70	102	M10	64	114.3	4"	115.5	22.5	19	82.4
125	F10	277	134.6	-	400	54	128	28	Ø125	250	234	70	102	M10	64	139.7	-	-	22.5	19	100
150	F10	307	134.6	-	480	54	128	28	Ø125	285	234	70	102	M10	64	168.3	-	-	22.5	19	100